End Semester Project Based Assessment Report – May 2024

Course Name: Analog System Design

Course Code: EIE316

Year: II

Student Name and Register No:

1. HEMANTH VANAMA &126160054
2. NAVIN PRAGAASH &126160030
3. KANDEEPAN&126160021
4. KOUSHIKA &126160025

B. Tech – Electronics and Communication Engineering – Specialized in Cyber Physical Systems

School of Electrical & Electronics Engineering

SASTRA Deemed University

CONTRIBUTIONS:

G.NAVIN PRAGAASH

My contribution is of design, simulation , analysis of high pass, low pass filter, for removing the unwanted noises in the ECG signal acquisition, integration of Schmidt trigger with microcontroller for triggering the clock of ADC

For the bandwidth of the filter I came to know the design frequencies from the research articles

I designed and simulated notch filter

I saw about the future improvements of this project in research articles and Included some more ideas and scope

I came to conclusion of cascading the high pass and low pass filter for a bandpass filter design

For simulation and graph I used multsim software

I came to an conclusion that the Schmidt trigger output is given as to trigger the ADC of the microcontroller

PROBLEM STATEMENT:

There were so many problems related to the heart. Which can be cured if we know about the electrical signals created by heart. We need a heart electrical signal acquisition system which will provide the heart electrical signals information and help to reduce the deaths due to heart related problems

OBJECTIVE:

The project aims to develop an heart electric signal acquisition system by using 3 electrodes (3-lead) and amplify, filtering noises using opamps and displaying through microcontroller.

To create an optimized circuit which amplify and filter by using opamps in a efficient way which provides safety to the user and less cost.

The project aims to develop an heart electric signal acquisition system by using 3 electrodes (3-lead) and amplify , filtering noises using opamps and displaying through microcontroller.

BLOCK DIAGRAM OF ECG ACQUISATION:

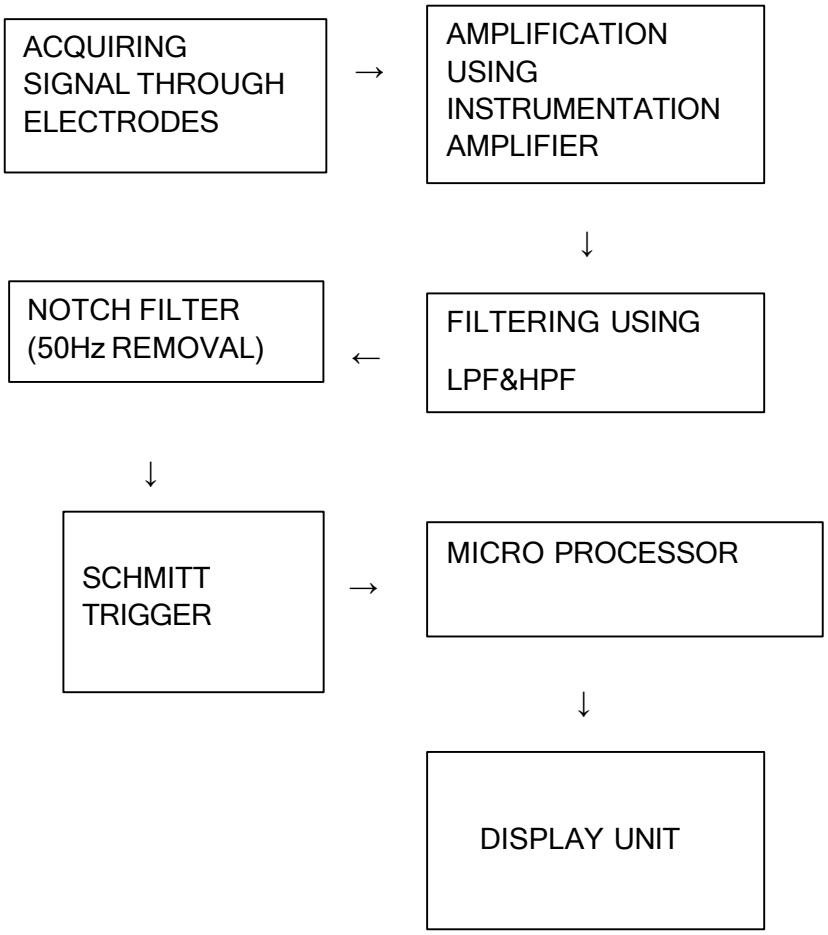

Specifications:

1) The number of channels present in the ecg were three

2) The total gain of the electrical signals is 1000

3) The output frequency from the ecg is in the range of 0.05Hz-150Hz (bandwidth)

4) High input impedance because of instrumentation amplifier presence

5) 50Hz frequency will be removed from the signal input due to presence of notch filter.

6) 10-bit ADC presented in the microcontroller is used

7) OLED display using micro controller

Electrical signal from heart:

Firstly the Automatic Nervous System Sends the Signal to the Sino atrial node. which is located at Right auricle it is Responsible for producing. This Chain Reaction of Depolarisation by generation of electrical Impulses That make ion channels open & close That will Produce charge imbalance. This Charge imbalance flow like an chain Reaction. The charge Imbalance due to motion of (Na+, K+, ca+2 ions) in and out of the Cells of heart. as Shown in below Diagram It Produce an dipole
Due to charge imbalance. Due to this imbalance of charge an voltage is produced that's what is detected by the electrodes.

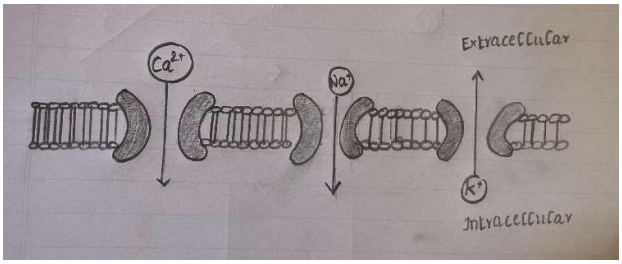

Signal through Electrodes:

The voltage produced due to the heart activity. By placing electrodes which is made of silver (ag-agcl).it is selected because it has high conductance when compared to the other elements. through it we can easily acquire heart signal too. When electrodes are placed upon skin. skin it is attached through conductive electrode gel due to its adhesive nature.it will reduce the resistance at the contact so that it's also possible to avoid attenuation of the signal too. It is also acts like an electrolyte. due to the contact of metal and electrolyte the ions present in metal lose electron at one phase.

M ---- →(M)^+n +n(e)^- (M represents metal(silver))

That makes electrode as -ve charge when compared to electrolyte(oxidation).

Similarly in the electrolyte. The metal ions takes ne^- from the metal and get deposited electrode as +ve charge (reduction).

Ehalf-cell=Eo+RT/NF(concentration of oxidation /concentration of reduction)

Ehalf-cell depends upon both ions and metal oxide

Eo represents standard half-cell potential.

E half-cell is the potential which is ~ voltage acquired at the electrode

Placements of electrodes:

These were placed upon left arm, right arm, left leg and another one is upon right leg it is for grounding purpose.

We are planning to do with 3 leads. Lead 1-right arm, lead 2-left arm, lead 3-left leg

It works on the principle of dipole moment -it's a vector quantity which will have both direction and magnitude.

Lead 1:it shows the electric potential between RA(right arm(-ve)) and LA(left arm(+ve))

Lead 2: potential between RA(-ve) and LL(left leg(-ve)).

Lead 3: potential between LA(-ve) and LL(+ve)

If a dipole vector pointing towards the positive electrode then the signal will be similar to figure(i) given below. It will show positive deflection. It will occur at position of polarisation

If a dipole vector pointing opposite to the previous then it shows negative deflection as figure(ii) shown below. It occurs at state of repolarisation

deflection is directly proportional to the magnitude of the dipole

actually it will read only the dipole moments which are parallel to the direction of electrodes. practically the dipoles which formed at depolarisation of heart cells is not parallel to the electrodes but they have the parallel components to the electrodes actually the electrodes acquires only that parallel components to the electrodes as shown in figure (iii). The perpendicular components to the electrodes will show zero deflection.

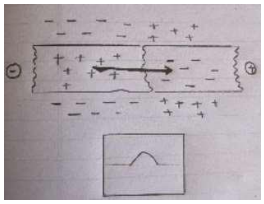

fig(i)

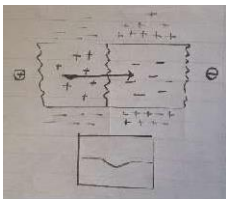

fig(ii)

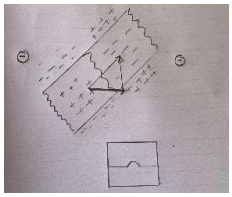

fig(iii)

AMPLIFICATION PROCESS:

We want an amplifier which has more gain like 1000 we can't directly amplify with 1000 gain

Because it can decrease bandwidth because

Amplification process is a trade-off between gain and bandwidth

We know that

Gain x Bandwidth = constant

That means an amplifier with more gain will have reduced bandwidth and it also amplifies noise

We can amplify more gain by using different gain amplifiers and cascading them

There are two options by using two amplifiers of 50 and 20 gain cascading

First, we have "amplify with 20 gain and again amplify with 50 gain" and vice versa good option is we have to amplify once with 50 gain again amplify with 20 gain we will go with the second option because we will have a very weak signal from electrodes.

The signal may not be amplified to the desired effectively If we go with first option.

Here the part that I inferred was **<u>"Amplification".</u>**

Firstly I start with the introduction and then followed by circuit diagram, derivation, its

Calculation.

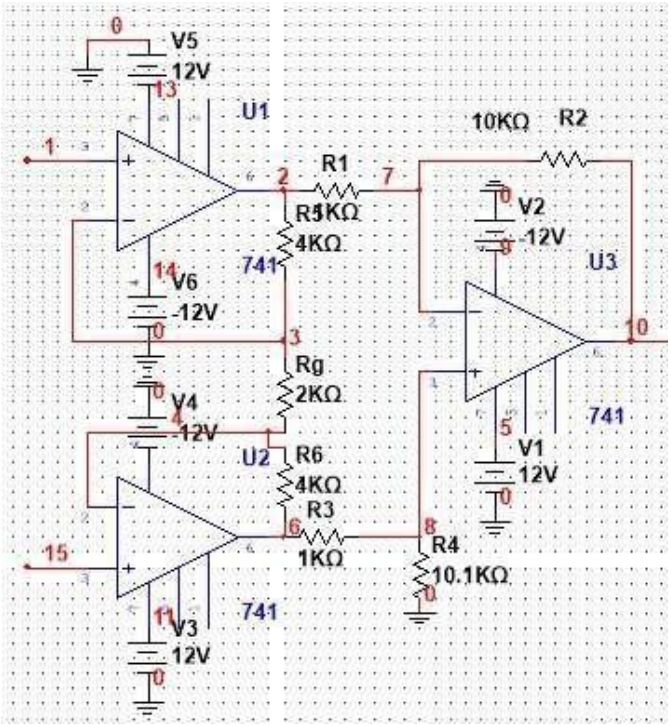

The heart signal is very small signal (low amplitude), we need to remove common noise from the both the electrodes and we need to minimize the loading effect upon the electrodes which need high impedance these all requirements fulfilled by instrumentation amplifier.

The properties of instrumentation amplifier are:

1) High common mode rejection ratio

2) High input impedance and low noise

3) Gain flexibility for tuning

4)precision and stability

An instrumentation amplifier in an electrocardiogram (ECG) works by amplifying the tiny electrical signals produced by the heart. It consists of multiple operational amplifiers arranged in a specific configuration to provide high common-mode rejection

CMRR:

ECG signals are very small in amplitude such that in millivolt range.
This amplifier are designed to amplify the small differential voltage between two electrodes while rejecting any common-mode interference such as noise or interference from other electrical sources.

High Input Impedance:

Instrumentation amplifier have high input impedance which minimizes loading effects on the electrodes and ensures the ECG signal is not distorted due to impedance mismatch.

Low Noise:

They are designed to have low noise characteristics, which is usefull for accurately capturing the small amplitude ECG signals without additional noise.

Adjustable Gain:

This amplifier allow for adjustable gain, which gives healthcare professionals to amplify the ECG signal to an appropriate level for analysis without saturating the signal or losing important data.

Precision and Stability:

They have high precision and stability, such that the amplified ECG signal remains accurate and consistent and under varying environmental conditions. instrumentation amplifiers provide the necessary amplification, noise rejection, and signal integrity required for accurate and reliable ECG measurements.

CIRCUIT DIAGRAM:

Instrumentation amplifier

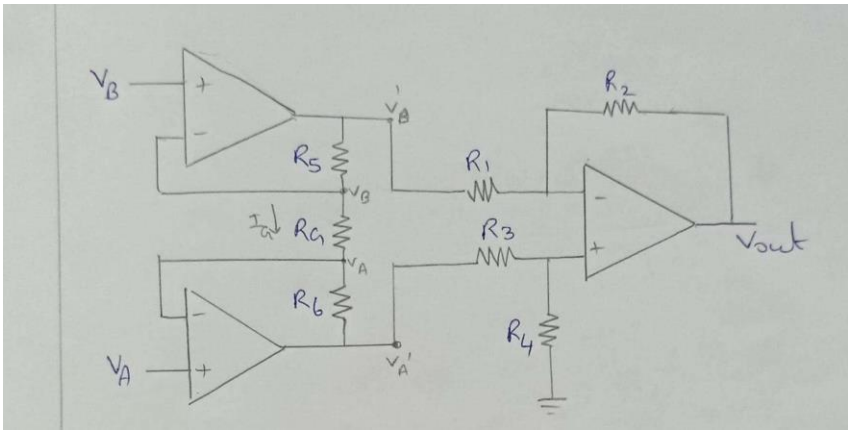

DESIGN:

Let V2=0 virtually Vb=0

Vo=Vo1+Vo2

Let Vx1=(1+R2/R1)V1 , Vy1=(-R2/R1)V1

Vo1=R4/R3(Vy1-Vx1)

=R4/R3(-R2V1/R1-(1+R2/R1)V1)

=V1.R4/R3(-R2/R1-R1/R1-R2/R1)

=R4/R3.V1(-2R2/R1-1)

Vo1=-R4/R3(1+2R2/R1)V1 ---When V2=0

Let V1=0 Virtually Va=0

Let Vx2=(-R2/R1)V2 Vy2=(1+R2/R1)V2

Vo2=R4/R3(Vy2-Vx2)

=R4/R3[V2((1+R2/R1)-(R2/R1))]

=R4/R3(R1/R1+R2/R1+R2/R1)V2

Vo2=R4/R3(1+2R2/R1)V2-------When V1=0

Now Vo=Vo1+Vo2

Vo=(-R4/R3(1+2R2/R1)V1)+(R4/R3(1+2R2/R1)V2)

=(1+2R2/R1)(R4/R3)(V2-V1)

Vo =R4/R3(1+2R2/Rg)(V2-V1)

Also written as **Vo=R4/R3(1+2R2/Rg)(VA-VB)**

Let **R1=R3=1KΩ, R2=10KΩ, R4=10.1KΩ**

R5=4KΩ and Rg=2KΩ

Vo=(1+2(R5/Rg))(R2/R1)(VA-VB)

=(1+2x(4K/2k))(10k/1k)(VA-VB)

=(4)(10)(VA-VB)

=50(VA-VB)

Thus **Gain=Vo/(VA-VB)=50**

This output is given to the non-inverting amplifier circuit

CIRCUIT DIAGRAM:

Non inverting amplifier

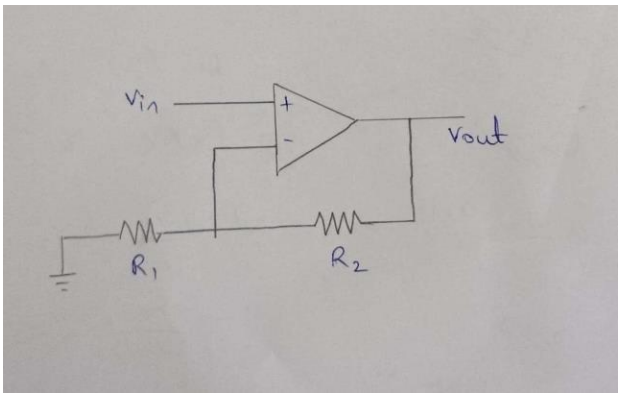

DESIGN:

0-Vin/R1=Vin-Vo/R2

-Vin/R1-Vin/Rf=-Vo/R2

-Vin(R2+R1/R1Rf)=-Vo/Rf

Vo/Vin=R2(R1+R2)/R1R2

=1+R2/R1

Thus Vo=(1+(R2/R1))Vin

Let R1=1KΩ , R2=19KΩ

Vo=(1+(R2/R1))Vin

=(1+(19k/1k))Vin

=20Vin

Thus Gain=Vo/Vin=20

This output is given to the filters

since the medically important information is contained within the bandwidth of 0.5hz to 150hz,

so filter used was bandpass filter, which is implemented as high pass filter cascaded with low pass filter

High pass filter

The dc offset is caused by electrode-gel-interface with the body

To remove the low frequency noise in the signal

To set the first cutoff frequency as 0.5hz

general second order filter

$Y_1, Y_2, Y_3, Y_4 \rightarrow$ admittances

$$V_o = \left(1 + \frac{R_f}{R_i}\right) \cdot V_B \quad -①$$

$$V_o = A_o \cdot V_B$$

$$V_B = \frac{V_o}{A_o} \quad -②$$

by applying KCL at node 'A'

$$(V_i - V_a) Y_1 = (V_A - V_B) Y_2 + (V_A - V_o) Y_3$$

$$V_i Y_1 = V_A Y_1 + V_A Y_2 - V_B Y_2 + V_A Y_3 - V_o Y_3$$

using ②.

$$V_i Y_i = V_A (Y_1 + Y_2 + Y_3) - \frac{V_o}{A_o} Y_2 - V_o Y_3$$

at node 'B', using KCL

$$(V_A - V_B) Y_2 = V_B Y_4$$

$$V_A = \frac{V_B (Y_2 + Y_4)}{Y_2}$$

using ② we get

$$V_A = \frac{V_o}{A_o} \cdot \frac{Y_2 + Y_4}{Y_2}$$

Substitute ④ in ③, we get

$$V_i Y_1 = \frac{V_o}{A_o} \left(\frac{Y_2 + Y_4}{Y_2}\right) (Y_1 + Y_2 + Y_3) - V_o Y_3 - \frac{V_o}{A_o} Y_2$$

$$= \frac{A_0 (Y_2 + Y_3)(Y_1 + Y_2 + Y_3) - A_0^2 Y_2 \cdot Y_0 Y_3 - A_0 Y_2^2}{A_0^2 Y_2}$$

$$V_i Y_1 = V_0 \left[\frac{A_0 (Y_2 + Y_4)(Y_1 + Y_2 + Y_3) - A_0^2 Y_2 Y_3 - A_0 Y_2^2}{A_0^2 Y_2} \right]$$

$$\frac{V_0}{V_i} = \frac{A_0^2 Y_1 Y_2}{A_0 [(Y_2 + Y_4)(Y_1 + Y_2 + Y_3) - A_0^2 Y_2 Y_3 - A_0 Y_2^2]}$$

$$= \frac{A_0^{\cancel{2}} Y_1 Y_2}{\cancel{A_0} (Y_2 Y_1 + Y_2^2 + Y_2 Y_3 + Y_4 Y_1 + Y_2 Y_4 + Y_3 Y_4 - A_0^2 Y_2 Y_3 - A_0 Y_2^2]}$$

$$H(s) = \frac{A_0 Y_1 Y_2}{Y_1 Y_2 + Y_4 (Y_1 + Y_2 + Y_3) + (1 - A_0) Y_2 Y_3}$$

For a second order high pass filter

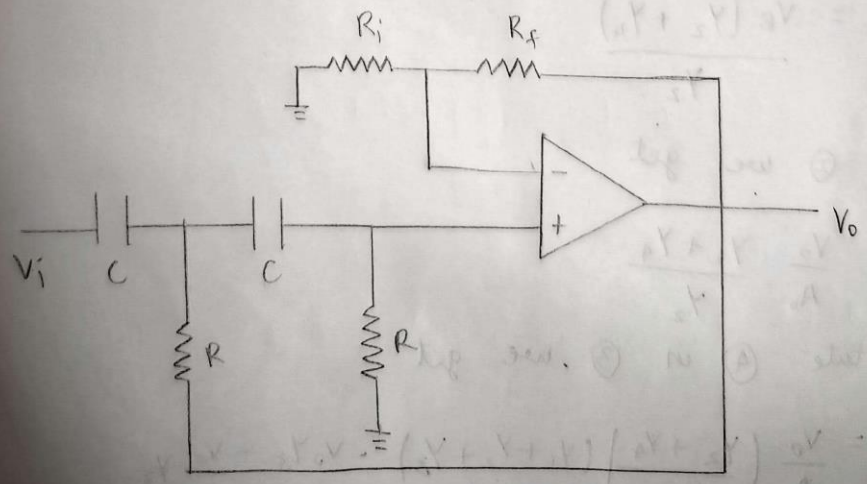

$Y_1 = Y_2 = sC$

$Y_3 = Y_4 = 1/R$

$$H(s) = \frac{A_0 s^2 C^2}{s^2C^2 + 1/R\,(2sC + 1/R) + (1-A_0)\,sC \cdot \frac{1}{R}}$$

$$= \frac{A_0 s^2 C^2}{s^2C^2 + \frac{2sC}{R} + \frac{1}{R^2} + \frac{sC}{R} - \frac{A_0 sC}{R}}$$

$$= \frac{A_0 s^2 C^2 R^2}{s^2C^2R^2 + 3sCR - A_0 sCR + 1}$$

$$= \frac{A_0 s^2 C^2 R^2}{s^2C^2R + (3-A_0)sRC + 1}$$

let $\omega = \frac{1}{RC}$ $\quad RC = \frac{1}{\omega_l}$

$$H(s) = \frac{A_0 s^2/\omega_l^2}{\frac{s^2}{\omega_l^2} + (3-A_0)\frac{s}{\omega_l} + 1}$$

$$\frac{A_0 s^2/\omega_l^2}{s^2 + (3-A_0)s\omega_l + \omega_l^2}$$

$$H(j\omega) = H(s) = \frac{A_0}{1 + (3-A_0)\frac{\omega_l}{s} + \frac{\omega_l^2}{s^2}}$$

$$H(s) = \frac{A_0}{\left(\frac{\omega_l}{\omega_0}\right)^2 + (3 - A_0)\frac{\omega_l}{j\omega} + 1}$$

Low pass filter

To remove the high frequency noise in the signal

To enhance the signal visibility

ECG signals are contaminated by noise (electrical signals from muscles other than the heart, breathing movements, or poor electrode connections), it may create a “fuzzy” reading.

To set the second cutoff frequency as 150hz

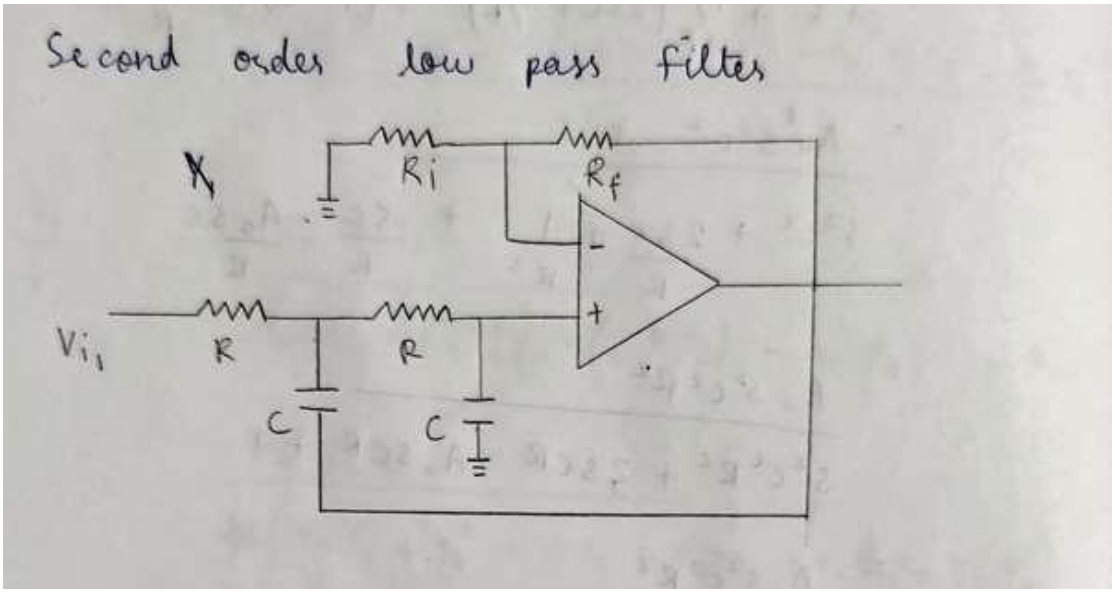

$$Y_1 = Y_2 = \frac{1}{sC}. \qquad Y_3 = Y_4 = s \cdot C.$$

$$H(s) = \frac{A_0 \cdot \frac{1}{R^2}}{\frac{1}{R^2} + sC\left(\frac{1}{R} + 1/R + sC\right) + (1 - A_0)}$$

$$= \frac{A_0 / R^2}{\frac{1 + R^2 sC\left(\frac{2}{R} + sC\right) + (1 - A_0) R^2 \cdot sC/R}{R^2}}$$

$$= \frac{A_0}{1 + 2sRC + s^2R^2C^2 + (1 - A_0) sRC}$$

$$H(s) = \frac{A_0}{s^2R^2C^2 + (3 - A_0) sRC + 1}.$$

$$= \frac{A_0}{\left(\frac{\omega_l}{\omega_0}\right)^2 + (3 - A_0)\frac{s}{\omega} + 1}.$$

$$\omega = \frac{1}{RC}$$

$$f_c = \frac{1}{2\pi RC}.$$

Design:

LOW PASS FILTER:

C=0.1µf R1=R2=R C1 = C2 = C

Fo = 1/2ΠRC R=1/2Πx150x0.1x10^-6

R=10kΩ

FOR n=2, α=1.414 , Ao = 3-α = 1.586

Ao = 1+Rf/Ri = 1+1590/2700 = 1.58 Let

Rf=1.59kΩ Ri=2700Ω

FOR HIGH PASS FILTER:

Fo=0.5Hz C=0.1µf R1=R2=R C1=C2=C

Fo=1/2ΠRC R=1/2Πx0.5x0.1x10^-6

R=3.18MΩ

FOR n=2, α=1.414 , Ao=3-α=1.586

Ao=1+Rf/Ri=1+1000/1000 = 2

Let Rf = 1kΩ Ri = 1KΩ

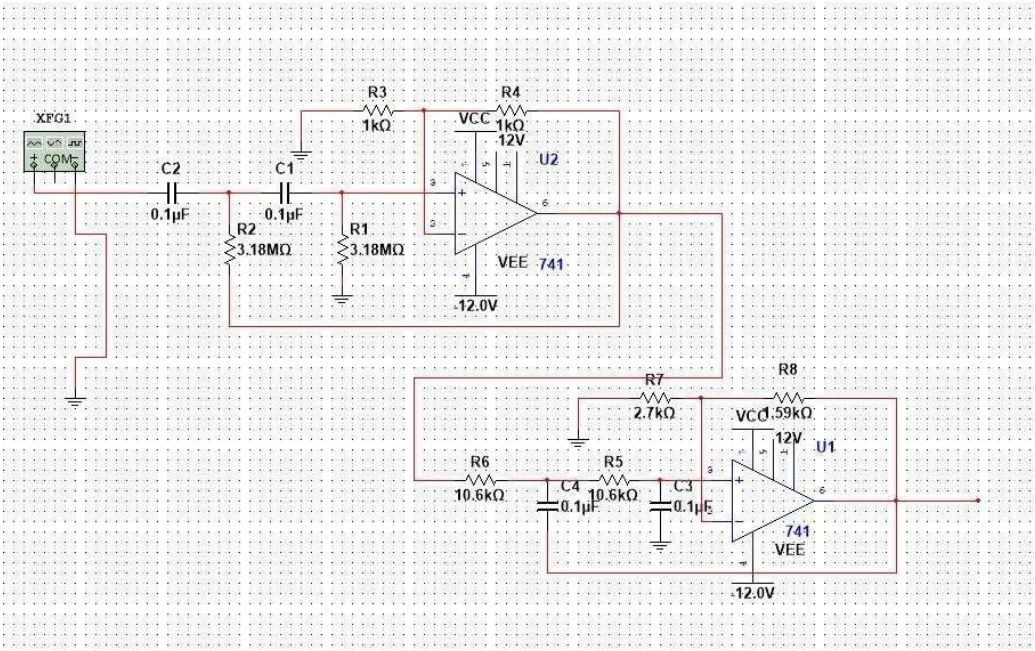

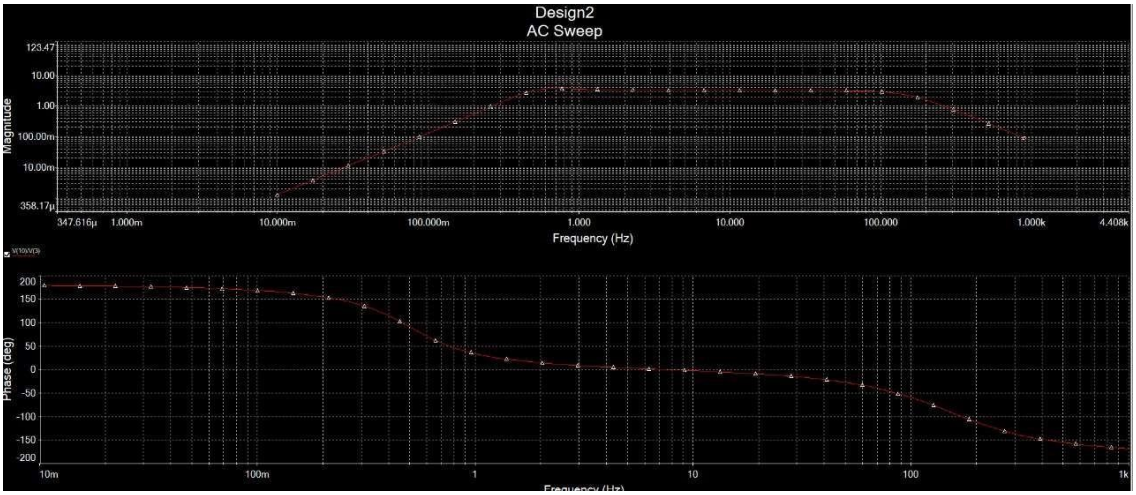

This output is given to the notch filter

Notch filer :

It is mainly used to remove the noise which is from the power source with a frequency if the signal is recorded it affects the quality of the signal

even though the noise is eliminated in power source frequency some properties of the signal in the that notch frequency is also gets lost

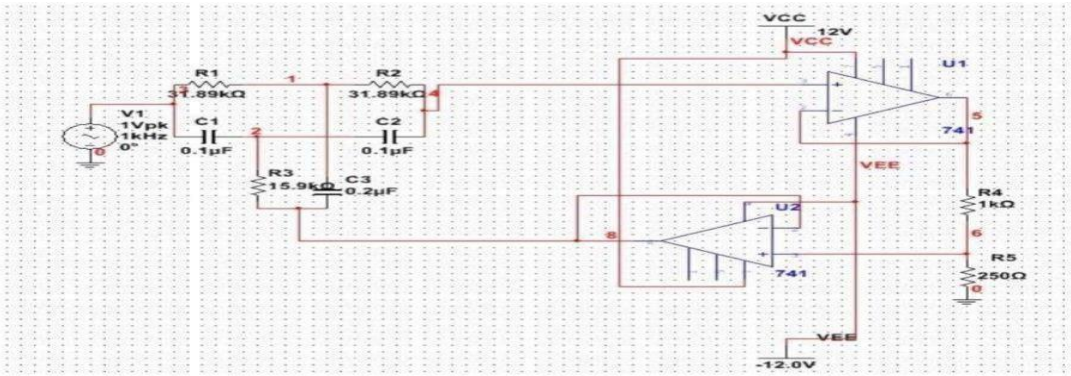

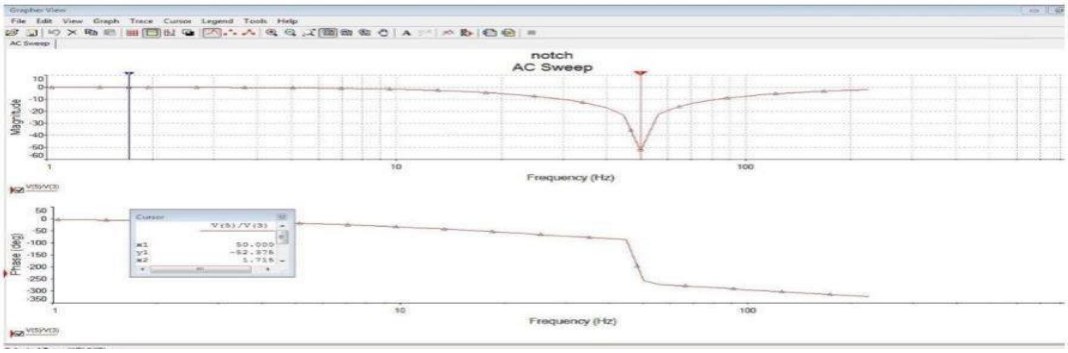

Notch filter

DERIVATION:

Notch filter block diagram

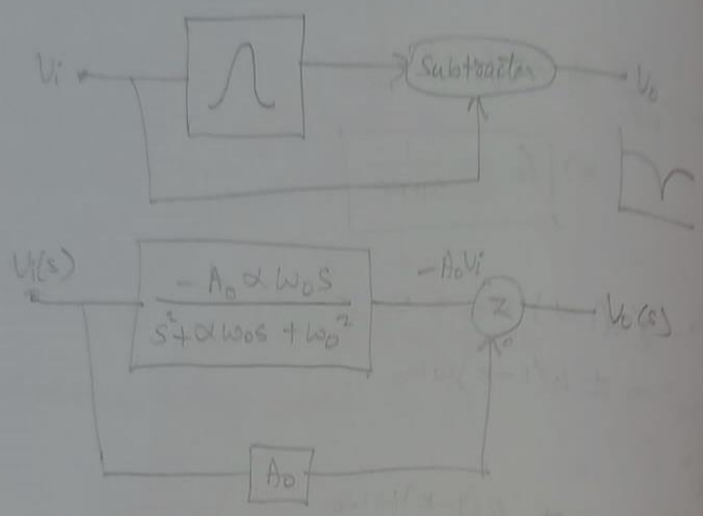

$$V_o(s) = A_0 V_i(s) + \left[\frac{-A_0 \alpha \omega_0 s \cdot V_i(s)}{s^2+\alpha\omega_0 s+\omega_0^2}\right]$$

$$= \frac{A_0 V_i(s)\left[s^2+\alpha\omega_0 s+\omega_0^2\right] - A_0 \alpha \omega_0 s \cdot V_i(s)}{s^2+\alpha\omega_0 s+\omega_0^2}$$

$$= \frac{A_0 V_i(s)\left[s^2+\alpha\omega_0 s+\omega_0^2-\alpha\omega_0 s\right]}{s^2+\alpha\omega_0 s+\omega_0^2}$$

$$H(s) = A_0 \cdot V_i(s)\left[\frac{s^2+\omega_0^2}{s^2+\alpha\omega_0 s+\omega_0^2}\right]$$

Twin T network

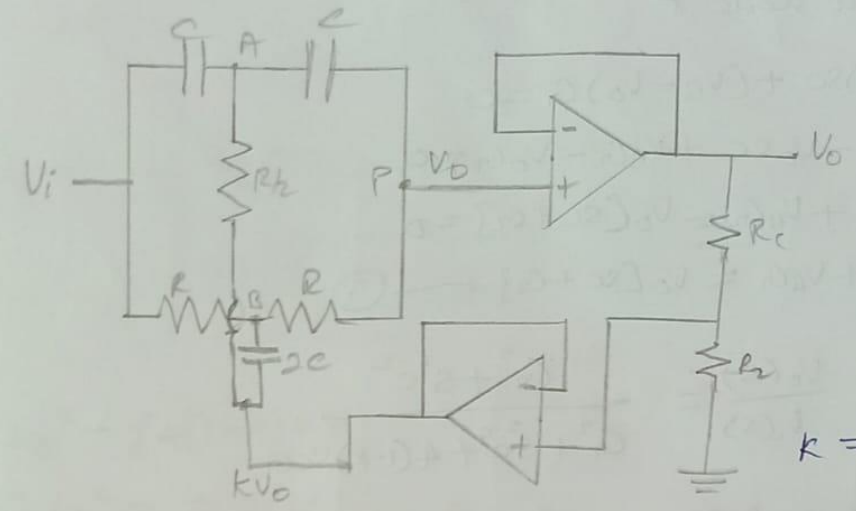

$$k = \frac{R_2}{R_1+R_2}$$

KCL at node A

$$(V_i - V_A)sC = (V_A - V_o)sC + (V_A - kV_o)2G$$

$$V_i sC - V_A sC = V_A sC - V_o sC + V_A 2G - kV_o 2G$$

$$V_i sC = V_A sC + V_A sC - V_o sC + V_A 2G - kV_o 2G$$

$$= V_A[2sC + 2G] - V_o[sC + k2G]$$

$$V_i sC + V_o[sC + k2G] = V_A[2sC + 2G] \quad \text{——— (1)}$$

KCL at node B

$$(V_i - V_B)G = (V_B - V_o)G + [V_B - kV_o]2sC$$

$$V_i G - V_B G = V_B G - V_o G + V_B 2sC - kV_o 2sC$$

$$V_i G = V_B G + V_B G - V_o G + V_B 2sC - kV_o 2sC$$

$$= V_B[2G + 2sC] - V_o[G + 2sCk]$$

$$V_i G + V_o[G + 2sCk] = V_B[2G + 2sC] \quad \text{——— (2)}$$

KCL at node P

$$(V_A - V_0)sC + (V_B - V_0)G = 0$$

$$V_A sC - V_0 sC + V_B G - V_0 G = 0$$

$$V_A sC + V_B G - V_0[sC + G] = 0$$

$$V_A sC + V_B G = V_0[sC + G] \quad \text{--- (3)}$$

$$H(s) = \frac{V_0(s)}{V_i(s)} = \frac{G^2 + s^2C^2}{G^2 + s^2C^2 + 4(1-k)sCG}$$

$\div$ Numerator & Denominator by C^2

$$= \frac{\frac{G^2}{C^2} + s^2}{\frac{G^2}{C^2} + s^2 + 4(1-k)\frac{sG}{C}}$$

$$= \frac{s^2 + \left(\frac{G}{C}\right)^2}{s^2 + 4(1-k)\frac{sG}{C} + \left(\frac{G}{C}\right)^2}$$

$$G = \frac{1}{R} \qquad \frac{G}{C} = \frac{1}{RC} = \omega_0$$

$$H(s) = \frac{s^2 + \omega_0^2}{s^2 + 4(1-k)s\omega_0 + \omega_0^2}$$

Let $s = j\omega$

$\Rightarrow s^2 = -\omega^2$

$$H(s) = \frac{-\omega^2 + \omega_0^2}{-\omega^2 + 4(1-k)j\omega\omega_0 + \omega_0^2}$$

$$= \frac{-(\omega^2 - \omega_0^2)}{-[\omega^2 + 4j(1-k)\omega\omega_0 - \omega_0^2]}$$

$$H(s) = \frac{\omega^2 - \omega_0^2}{\omega^2 \pm 4j(1-k)\omega\omega_0 - \omega_0^2}$$

$$\omega_0 = \frac{1}{RC} \Rightarrow 2\pi f_0 = \frac{1}{RC}$$

$$\Rightarrow \boxed{f_0 = \frac{1}{2\pi RC}}$$

$$\omega^2 - \omega_0^2 - j4(1-k)\omega\omega_0 = 0$$

$$\omega^2 - \omega_0^2 = \pm 4(1-k)\omega\omega_0$$

$\div$ by ω_0^2

$$\left(\frac{\omega}{\omega_0}\right)^2 - 1 = \pm \frac{4(1-k)\omega\omega_0}{\omega_0^2}$$

$$\left(\frac{\omega}{\omega_0}\right)^2 \pm 4(1-k)\left(\frac{\omega}{\omega_0}\right) - 1 = 0$$

In the form $ax^2 + bx + c$

$$\therefore f_h = f_0\left[\sqrt{1+4(1-k)^2} + 2(1-k)\right]$$

$$f_L = f_0\left[\sqrt{1+4(1-k)^2} - 2(1-k)\right]$$

The 3dB BW is

$$BW = f_h - f_L = 4(1-k)f_0$$

$$Q = \frac{f_0}{BW} = \frac{f_0}{4(1-k)f_0} = \frac{1}{4(1-k)}$$

DESIGN:

R=1/4πfNC=1/4Πx50x0.1x10^-6 **R=795.77Ω**

K=0.975=R4/R3+R4 **R4=10K**

0.975(R3+10K)=10K

0.975R3+975K=10X10^3

R3=256Ω

This output is given to the Schmitt trigger

SCHMITT TRIGGER:

We directly can't give input to the microcontroller because the heart signal will have small fluctuations which will convey wrong information to the microcontroller by using the schmitt trigger. A Schmitt trigger helps the on chip Analog to digital convertor of Arduino in the conditioning of the signal it by avoiding the noise between the vut and vlt .

We can avoid fluctuations in the heart signal as per the data the heart signal is between 0.5 mv to the 5 mv we are giving 1000 gain after that will be changed to the 0.5 volts to the 5 volts let us take the reference line as average of the minimum and maximum we get 2.25 volts. Let us assume the heart signal consists of 10% noise.

Then 4.5/10= 0.45 volts

Then vut and vlt be

Vut=2.25+0.45=2.7volts

Vlt=2.25–0.45=1.8volts

Then

By considering **Vsat =12 volts**

Then according to the schmitt trigger equations

DERIVATION FOR SCHMITT TRIGGER

Let us assume vref =0 volts

We have given positive feedback to the opamp

Hence gain will be very large either it will be +vsat or -vsat

At the point a the

Va = +_vsat*(R1/(R1+R2))

If Vo=+vsat then,

Va=Vut

Vut=+vsat*(R1/(R1+R2))

Instead of comparing with the

Vref =0 we have changed to the comparison is with Vut

Till Vut output Vo will be Vsat

Once it crosses it Vref will be changed to Vlt

And this cycle will be repated the hysterisis gap should be choosen properly

Vh=Vut-Vlt

If this hysterisis is big we will lose the original signal.

If Vref is not equal to zero

Then we will get

Va=(R1/(R1+R2))*(Vsat-Vref) +Vref

After solving we get

Va=Vut =vsat*(R1/(R1+R2)) +Vref*(R2/(R1+R2))

Similarly for Vlt

Va=Vlt=-vsat*(R1/(R1+R2))+Vref*(R2/(R1+R2))

And

Vh=2vsat*(R1/(R1+R2))

Then by substituting the values in the formulaes we get

Va=Vut =vsat*(R1/(R1+R2)) +Vref*(R2/(R1+R2))

2.7=2.25R2/(R1+R2) +12 R1/(R1+R2)

After solving we get

0.45 R2=9.3R1

R2/R1 =20.67

Let us consider

R2=20.67 Kohm

R1=1K ohm

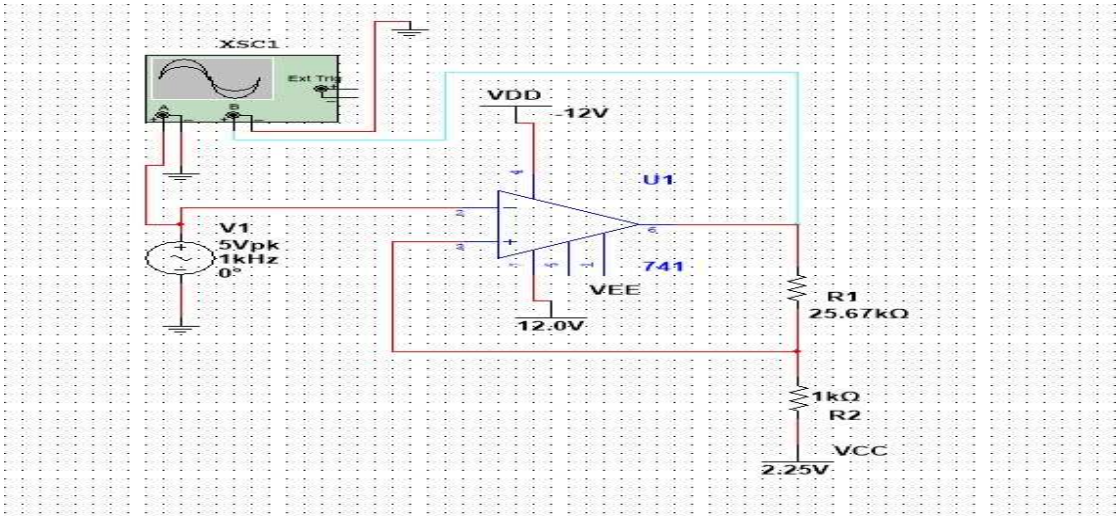
XSC1
Ext Trig
A
B
VDD
-12V
U1
V1
5Vpk
1kHz
0°
741
VEE
12.0V
R1
25.67kΩ
1kΩ
R2
VCC
2.25V

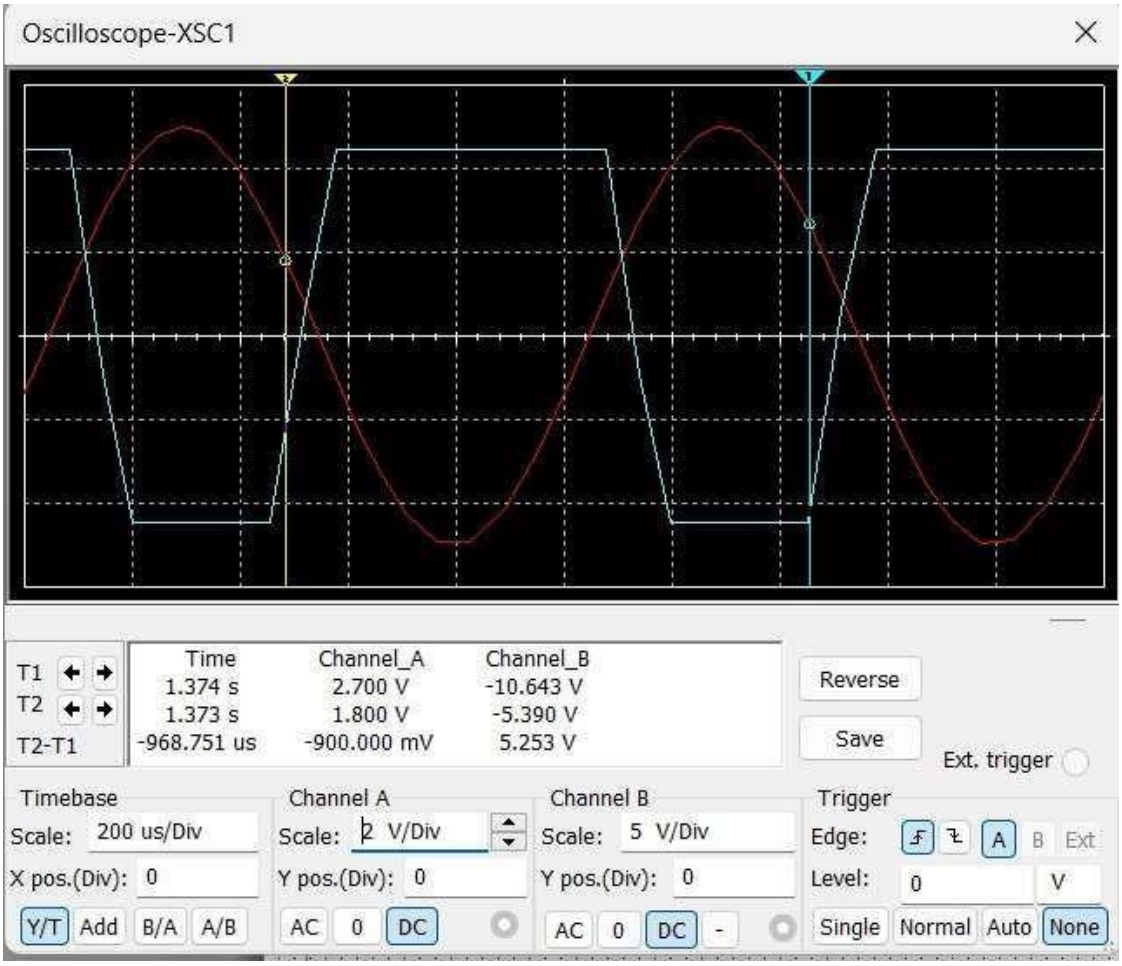
Oscilloscope-XSC1
T1
T2
T2-T1
Time
1.374 s
1.373 s
-968.751 us
Channel_A
2.700 V
1.800 V
-900.000 mV
Channel_B
-10.643 V
-5.390 V
5.253 V
Reverse
Save
Ext. trigger
Timebase
Scale: 200 us/Div
X pos.(Div): 0
Y/T Add B/A A/B
Channel A
Scale: 2 V/Div
Y pos.(Div): 0
AC 0 DC
Channel B
Scale: 5 V/Div
Y pos.(Div): 0
AC 0 DC -
Trigger
Edge:
A B Ext
Level: 0 V
Single Normal Auto None

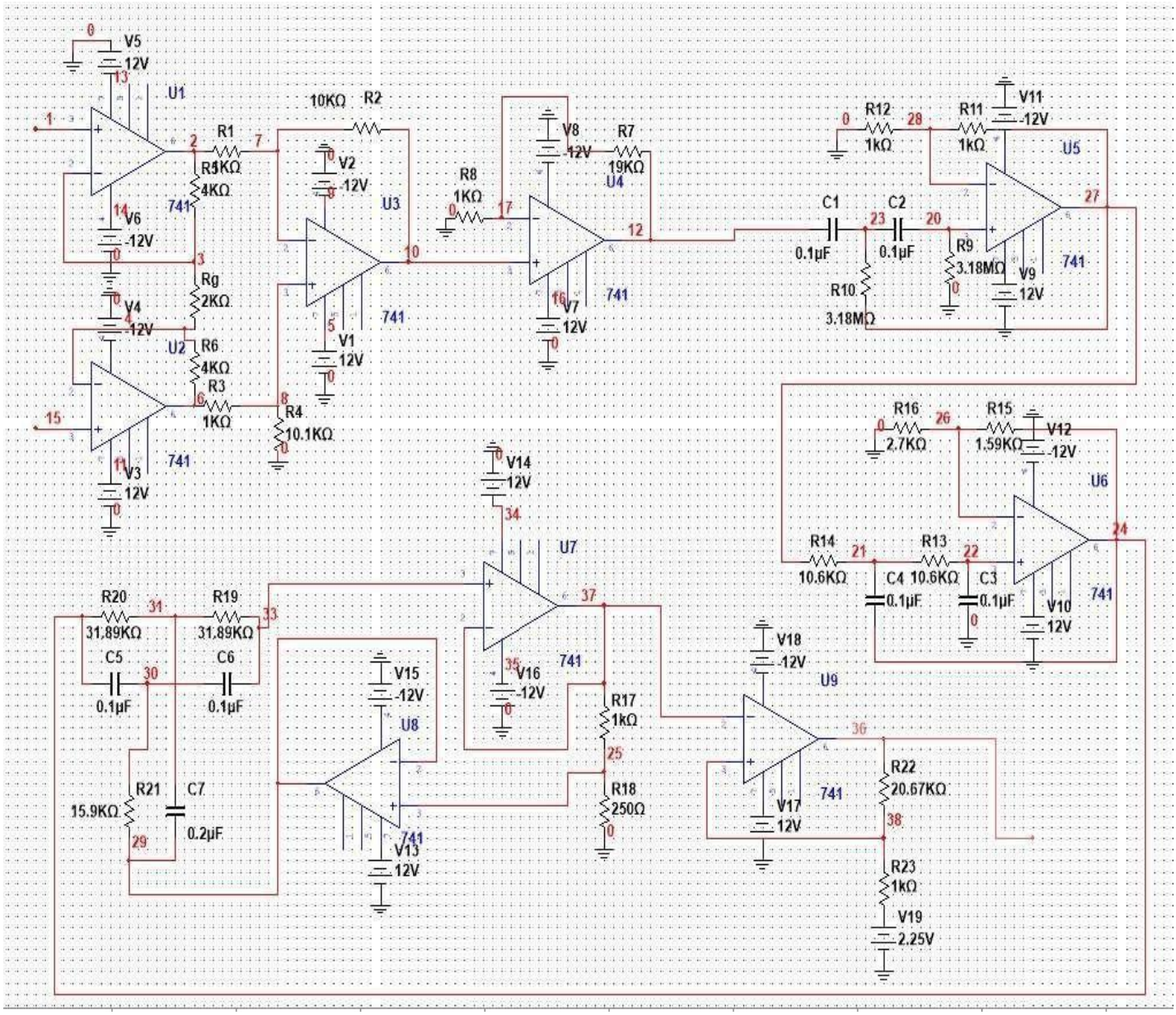

OVERALL CIRCUIT DIAGRAM

The output of the Schmitt trigger given as the clock for the on chip adc and it also contains internal clock both help for the conversion to the digital values the output of the notch filter is digitalized by giving the Schmitt trigger output as clock it ignores the noise and fluctuations present in the signal between the hysteresis. if the output of notch filter not in the range of 0-5v we can make it by using clamper circuit.

We have chosen Arduino because it supports analog input of range 0-5V and our output from the notch filter is between that range

Steps involved in for doing this process is

First the Materials Required for it

- Arduino board
- OLED display module
- Jumper wires

1) Wire Connections we want to make

- Connect the OLED display to the Arduino board using jumper wires and connect pins like VCC, GND, SDA, and SCL without fail

- Connect your analog signal from notch filter output to one of the analog input pins (e.g., A0) on the Arduino board.

2) Libraries which are used in this process

- Install the necessary libraries for your OLED display. Common libraries include Adafruit SSD1306 or U8g2.

- Use the Arduino Library Manager to search and install the required libraries.

3) Writing the Code according to this application

-give schmitt trigger output as timer for the adc and also the internal clock present in it

- Write the Arduino code to read the analog voltage value from the input pin using analogRead() function.

- Map the analog value to the desired range using the map() function.

- Display the value along with the input voltage on the OLED display.

4) Dumping the code into the arduino

- Connect your Arduino board to your computer using a USB cable.

- Open the Arduino IDE, copy and paste your code into a new sketch.

- Verify and upload the sketch to your Arduino board.

5) Testing the setup

- Once the code is uploaded successfully, turn on the Arduino board.

- Observe the OLED display to see the voltage reading and the digital value being displayed.

6)Troubleshooting

- If the OLED display doesn't show anything double-check your wiring connections and ensure whether the libraries are installed or not.

- Check any errors in the Arduino IDE's serial monitor or debug messages.

By following these procedures, we able to read the analog heart electrical signal an on-chip ADC in Arduino noise by using the filters like high pass, low pass and notch filter and display the result on an OLED display.

Result:

Successfully completed the designing the circuit for the acquisition of electrical signal of heart

And displaying it by filtering out the and digitalizing by using onchip adc and displaying by using OLED.

Future improvement

the ECG signal acquisition circuit can be improved by using low power design technology like CMOS,

for the improvement of simulation can be implemented by advanced EDA tool like tanner for analog verification

low power consuming ADC chip such as AD7980

16-bit Resolution Providing high precision for accurate ECG measurements.

It samples up to 1 MSPS (mega-samples per second).

Low Power Consumption Consumes only 7MW during operation.